CONVENTIONAL WIRE CONFIGURATION FOR SINGLE INPUT PAIR

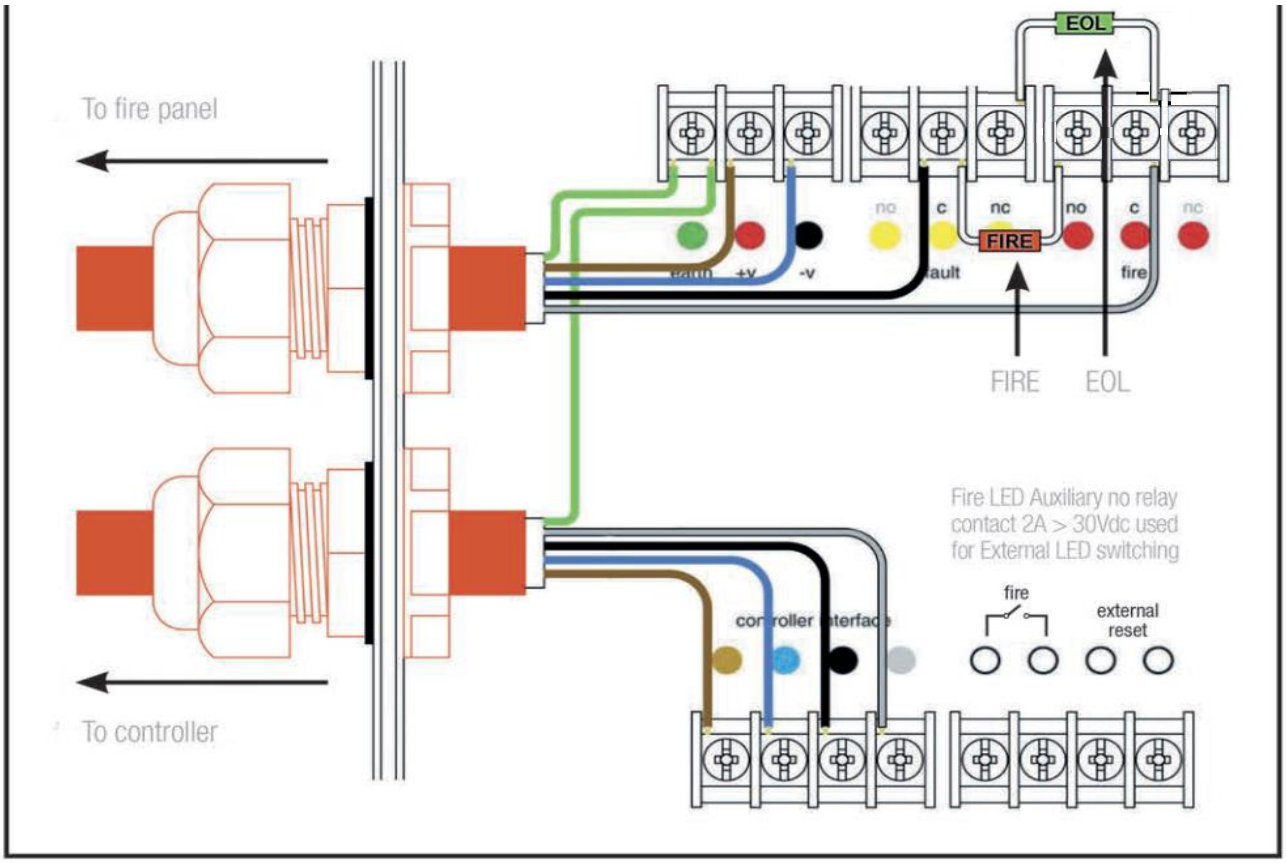

CONVENTIONAL WIRE CONFIGURATION FOR DUAL input /CHQ-POM

