Hochiki Europe Technical Support Team

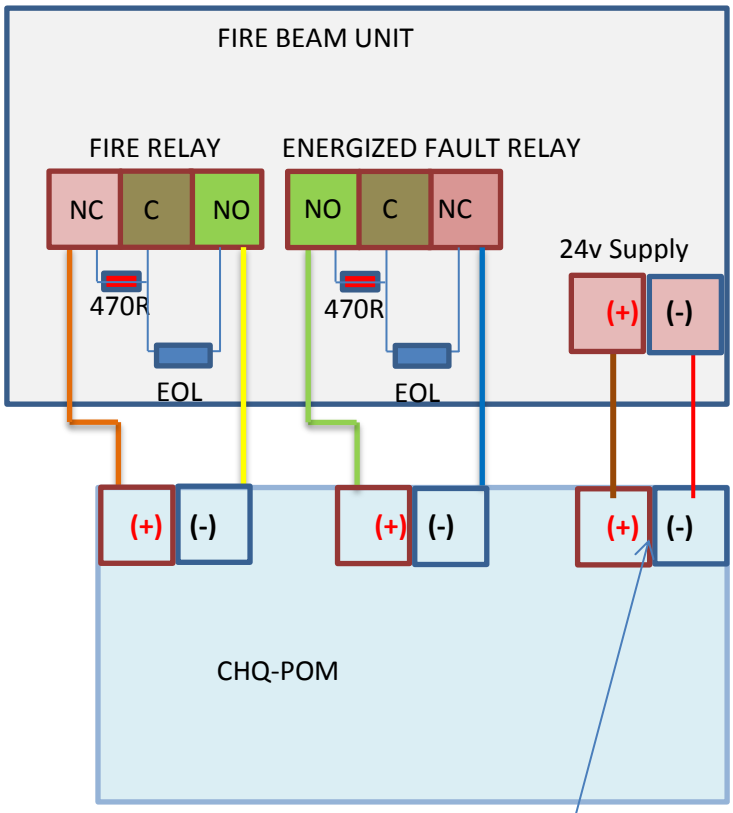

Ensure that you have configured the output with the correct current rating. The range of this output is 2mA – 32mA. When using this in conjunction with the Firebeam unit we recommend this is set to 22mA to allow for the start up current.

